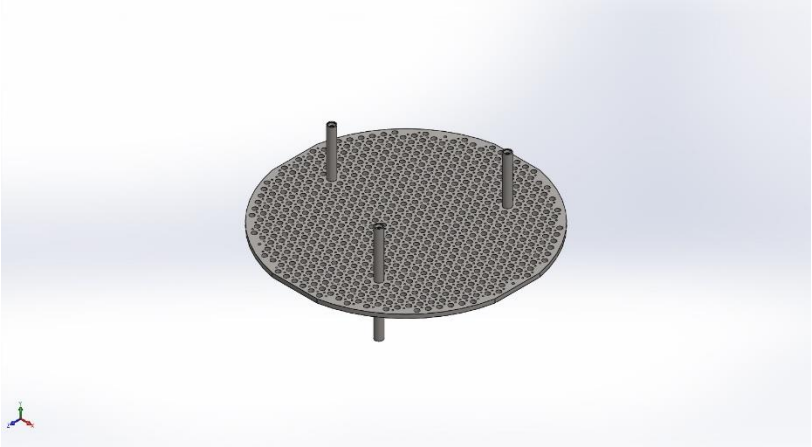

Simulation of Plattenbiegung_RT

Date: 12 August 2018
Designer: Gnadlinger
Study name: Static RT
Analysis type: Static

Table of Contents

Description 1
Assumptions 2
Model Information 3
Study Properties 5
Units 5
Material Properties 6
Loads and Fixtures 7
Contact Information 8
Mesh information 9
Sensor Details 10
Resultant Forces 10
Beams .....**Fehler! Textmarke nicht definiert.**
Study Results 11
Conclusion 13

Description

FEM-Analyse der Chargierplatte bei Raumtemperatur.

Assumptions

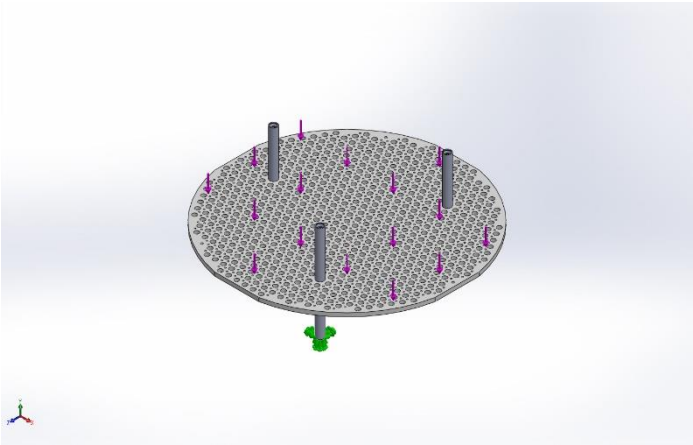

Original Model

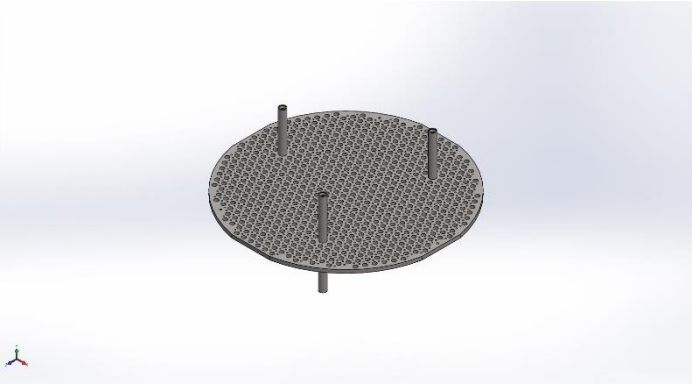

Model Analyzed

Model Information

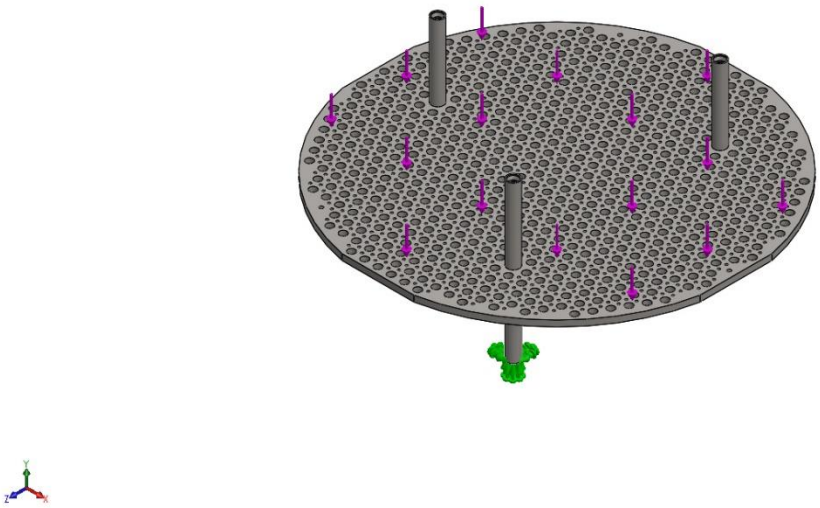

Model name: Plattenbiegung
Current Configuration: Default

Solid Bodies

Document Name and Reference	Treated As	Volumetric Properties	Document Path/Date Modified
Cut-Extrude2 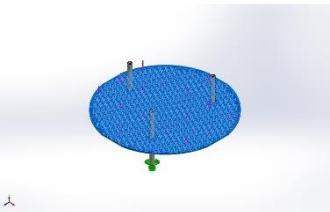	Solid Body	**Mass:248.447 kg** **Volume:0.0318522 m^3** **Density:7800 kg/m^3** **Weight:2434.78 N**	**C:\Users\micha\Dropbox\Diplomarbeit (1)\Zeichnugsableitungen_email\KPL6(55.55)_Platte(1530)_D30_Zentrum_mitO.SLDPRT** Mar 26 13:34:21 2019
M12 Gewindebohrung1 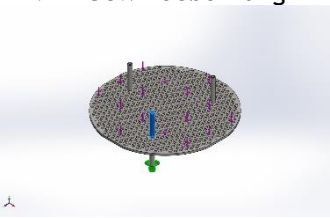	Solid Body	**Mass:4.67087 kg** **Volume:0.000598829 m^3** **Density:7800 kg/m^3** **Weight:45.7745 N**	**C:\Users\micha\Dropbox\Diplomarbeit (1)\fertigeÖfen\Steher\Oberseite_KPL_6.SLDPRT** Jan 06 14:58:46 2019
M12 Gewindebohrung1 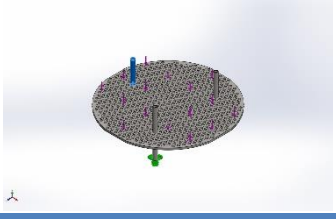	Solid Body	**Mass:4.67087 kg** **Volume:0.000598829 m^3** **Density:7800 kg/m^3** **Weight:45.7745 N**	**C:\Users\micha\Dropbox\Diplomarbeit (1)\fertigeÖfen\Steher\Oberseite_KPL_6.SLDPRT** Jan 06 14:58:46 2019

Gnadlinger

M12 Gewindebohrung1 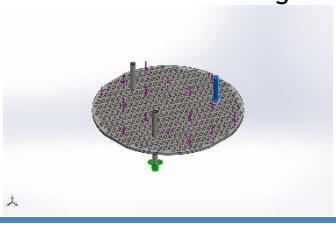	Solid Body	**Mass:4.67087 kg** **Volume:0.000598829 m^3** **Density:7800 kg/m^3** **Weight:45.7745 N**	**C:\Users\micha\Dropbox\Diplomarbeit (1)\fertigeÖfen\Steher\Oberseite_KPL_6.SLDPRT** Jan 06 14:58:46 2019
M12 Gewindebohrung1 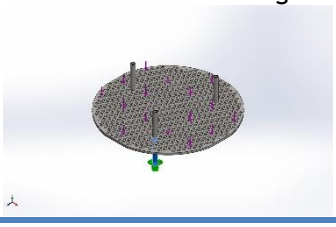	Solid Body	**Mass:4.67087 kg** **Volume:0.000598829 m^3** **Density:7800 kg/m^3** **Weight:45.7745 N**	**C:\Users\micha\Dropbox\Diplomarbeit (1)\fertigeÖfen\Steher\Oberseite_KPL_6.SLDPRT** Jan 06 14:58:46 2019
M12 Gewindebohrung1 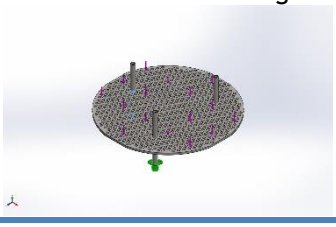	Solid Body	**Mass:4.67087 kg** **Volume:0.000598829 m^3** **Density:7800 kg/m^3** **Weight:45.7745 N**	**C:\Users\micha\Dropbox\Diplomarbeit (1)\fertigeÖfen\Steher\Oberseite_KPL_6.SLDPRT** Jan 06 14:58:46 2019
M12 Gewindebohrung1 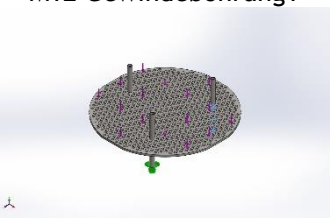	Solid Body	**Mass:4.67087 kg** **Volume:0.000598829 m^3** **Density:7800 kg/m^3** **Weight:45.7745 N**	**C:\Users\micha\Dropbox\Diplomarbeit (1)\fertigeÖfen\Steher\Oberseite_KPL_6.SLDPRT** Jan 06 14:58:46 2019

Study Properties

Study name	Static RT
Analysis type	Static
Mesh type	Solid Mesh
Thermal Effect:	On
Thermal option	Include temperature loads
Zero strain temperature	298 Kelvin
Include fluid pressure effects from SOLIDWORKS Flow Simulation	Off
Solver type	FFEPlus
Inplane Effect:	Off
Soft Spring:	Off
Inertial Relief:	Off
Incompatible bonding options	Automatic
Large displacement	Off
Compute free body forces	On
Friction	Off
Use Adaptive Method:	Off
Result folder	SOLIDWORKS document (C:\Users\micha\Desktop\FE-Simulationen\Plattenbiegung_KPL6)

Units

Unit system:	SI (MKS)
Length/Displacement	mm
Temperature	Kelvin
Angular velocity	Rad/sec
Pressure/Stress	N/m^2

Material Properties

Model Reference	Properties	Components
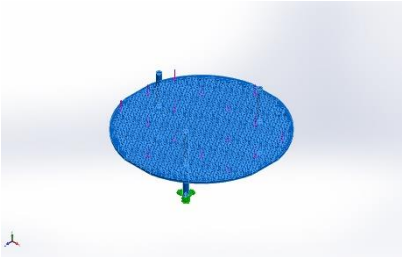	**Name:** 1.4828_RT **Model type:** Linear Elastic Isotropic **Default failure criterion:** Max von Mises Stress **Yield strength:** 2.35e+008 N/m^2 **Tensile strength:** 3.6e+008 N/m^2 **Elastic modulus:** 2.1e+011 N/m^2 **Poisson's ratio:** 0.34 **Mass density:** 7800 kg/m^3 **Shear modulus:** 7.7e+010 N/m^2 **Thermal expansion coefficient:** 1.1e-005 /Kelvin	SolidBody 1(Cut-Extrude2)(KPL6(55.55)_Platte(1530)_D30_Zentrum_mitO-1), SolidBody 1(M12 Gewindebohrung1)(Oberseite_KPL_6-1), SolidBody 1(M12 Gewindebohrung1)(Oberseite_KPL_6-2), SolidBody 1(M12 Gewindebohrung1)(Oberseite_KPL_6-3), SolidBody 1(M12 Gewindebohrung1)(Oberseite_KPL_6-4), SolidBody 1(M12 Gewindebohrung1)(Oberseite_KPL_6-5), SolidBody 1(M12 Gewindebohrung1)(Oberseite_KPL_6-6)
Curve Data:N/A		

Loads and Fixtures

Fixture name	Fixture Image	Fixture Details
Fixed-1	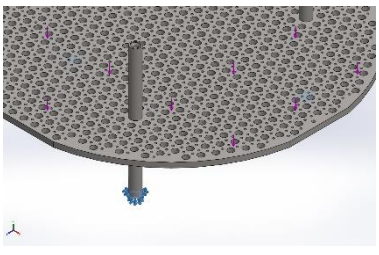	**Entities:** 3 face(s) **Type:** Fixed Geometry

Resultant Forces

Components	X	Y	Z	Resultant
Reaction force(N)	-0.0031395	6499.99	-0.0162667	6499.99
Reaction Moment(N.m)	0	0	0	0

Load name	Load Image	Load Details
Force-1	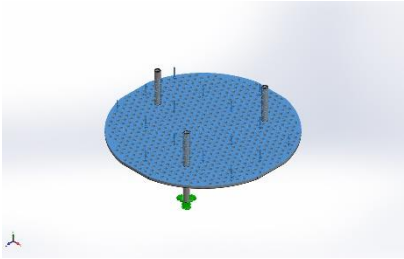	**Entities:** 3 face(s) **Type:** Apply normal force **Value:** 6500 N

Contact Information

Contact	Contact Image	Contact Properties
Global Contact	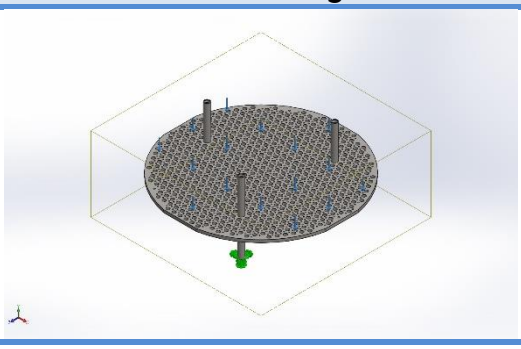	**Type:** Bonded **Components:** 1 component(s) **Options:** Compatible mesh

Mesh information

Mesh type	Solid Mesh
Mesher Used:	Curvature-based mesh
Jacobian points	4 Points
Maximum element size	69.1485 mm
Minimum element size	13.8297 mm
Mesh Quality Plot	High
Remesh failed parts with incompatible mesh	Off

Mesh information - Details

Total Nodes	463545
Total Elements	260869
Maximum Aspect Ratio	13.246
% of elements with Aspect Ratio < 3	77.3
% of elements with Aspect Ratio > 10	0.00115
% of distorted elements(Jacobian)	0
Time to complete mesh(hh;mm;ss):	00:00:44
Computer name:	

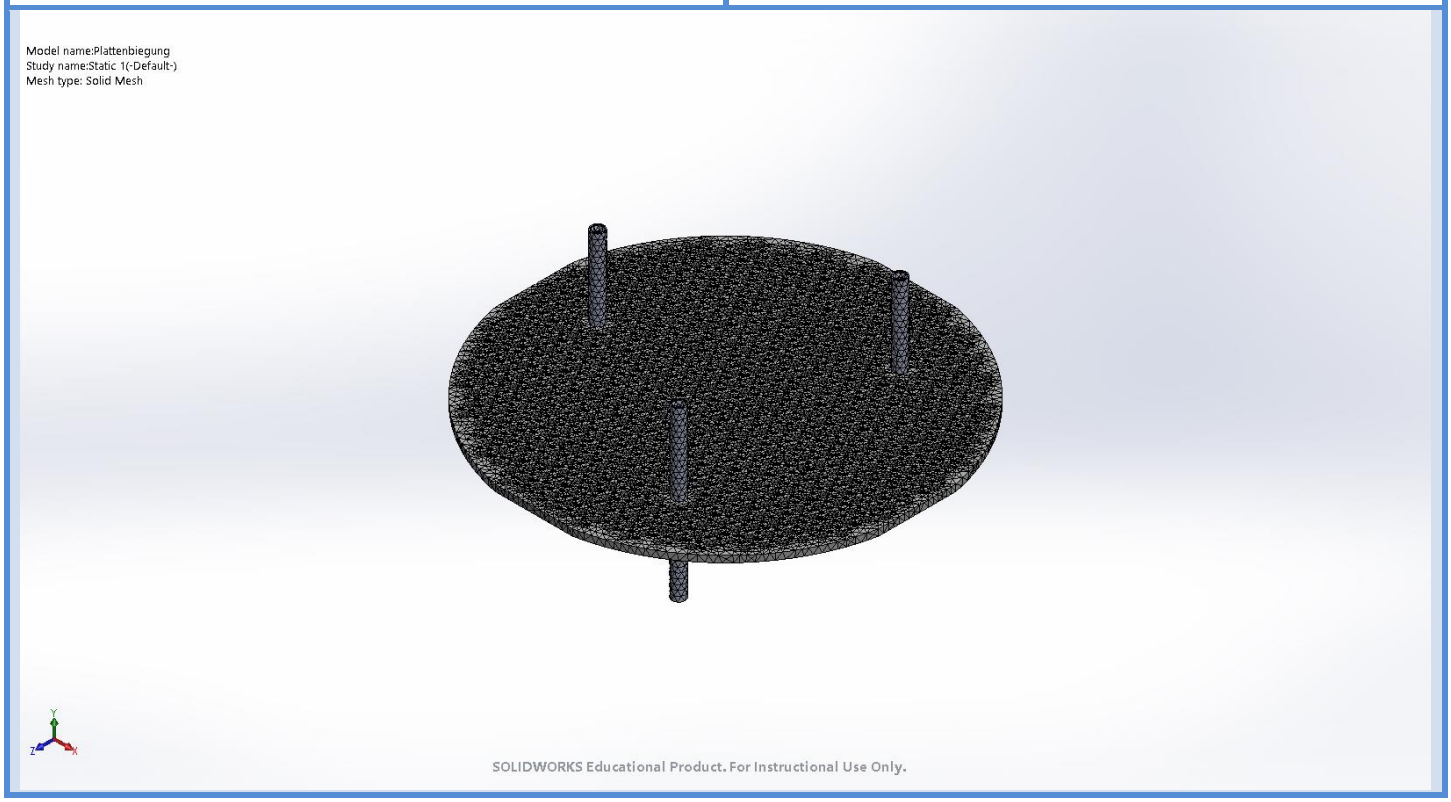

Sensor Details

Sensor name	Location	Sensor Details
Masse1	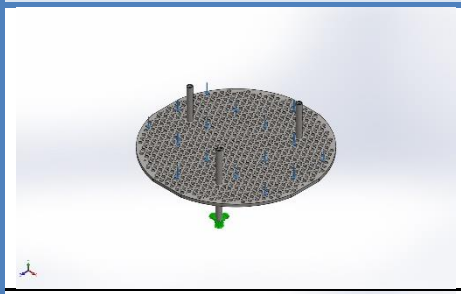	Value : 598.829211 g Entities : Result :Stress Component :VON: von Mises Stress Criterion :Model Max Step Criterion : Across all Steps Step No.:1 Alert Value: NA
Spannung1	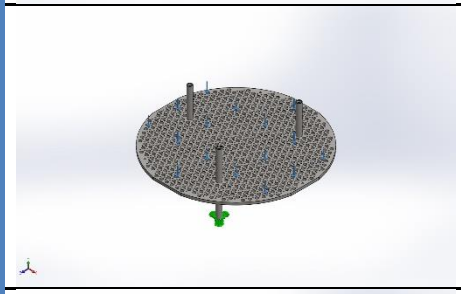	Value : Entities : Result :Stress Component :VON: von Mises Stress Criterion :Model Max Step Criterion : Across all Steps Step No.:1 Alert Value: NA
Verschiebung1	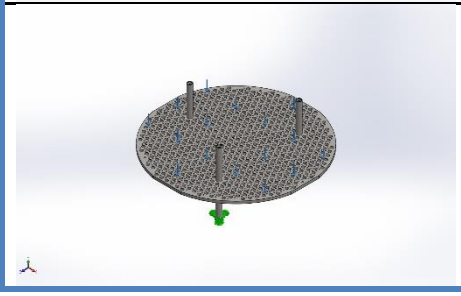	Value : Entities : Result :Displacement Component :URES: Resultant Displacement Criterion :Model Max Step Criterion : Across all Steps Step No.:1 Alert Value: NA

Resultant Forces

Reaction forces

Selection set	Units	Sum X	Sum Y	Sum Z	Resultant
Entire Model	N	-0.0031395	6499.99	-0.0162667	6499.99

Reaction Moments

Selection set	Units	Sum X	Sum Y	Sum Z	Resultant
Entire Model	N.m	0	0	0	0

Study Results

Name	Type	Min	Max
Stress1	VON: von Mises Stress	3.755e-008N/mm^2 (MPa) Node: 458020	1.463e+001N/mm^2 (MPa) Node: 73324

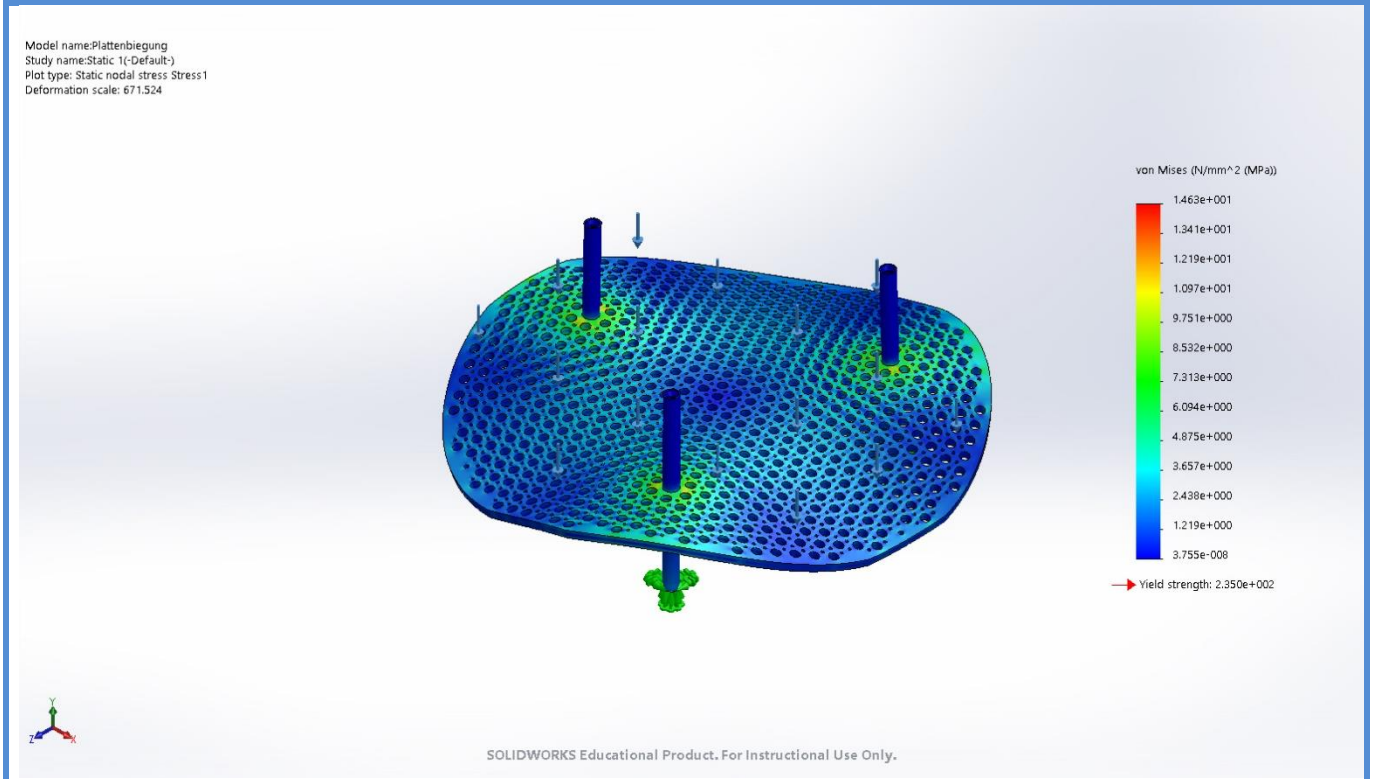

Plattenbiegung-Static 1-Stress-Stress1

Name	Type	Min	Max
Displacement1	URES: Resultant Displacement	0.000e+000mm Node: 458326	2.234e-001mm Node: 71054

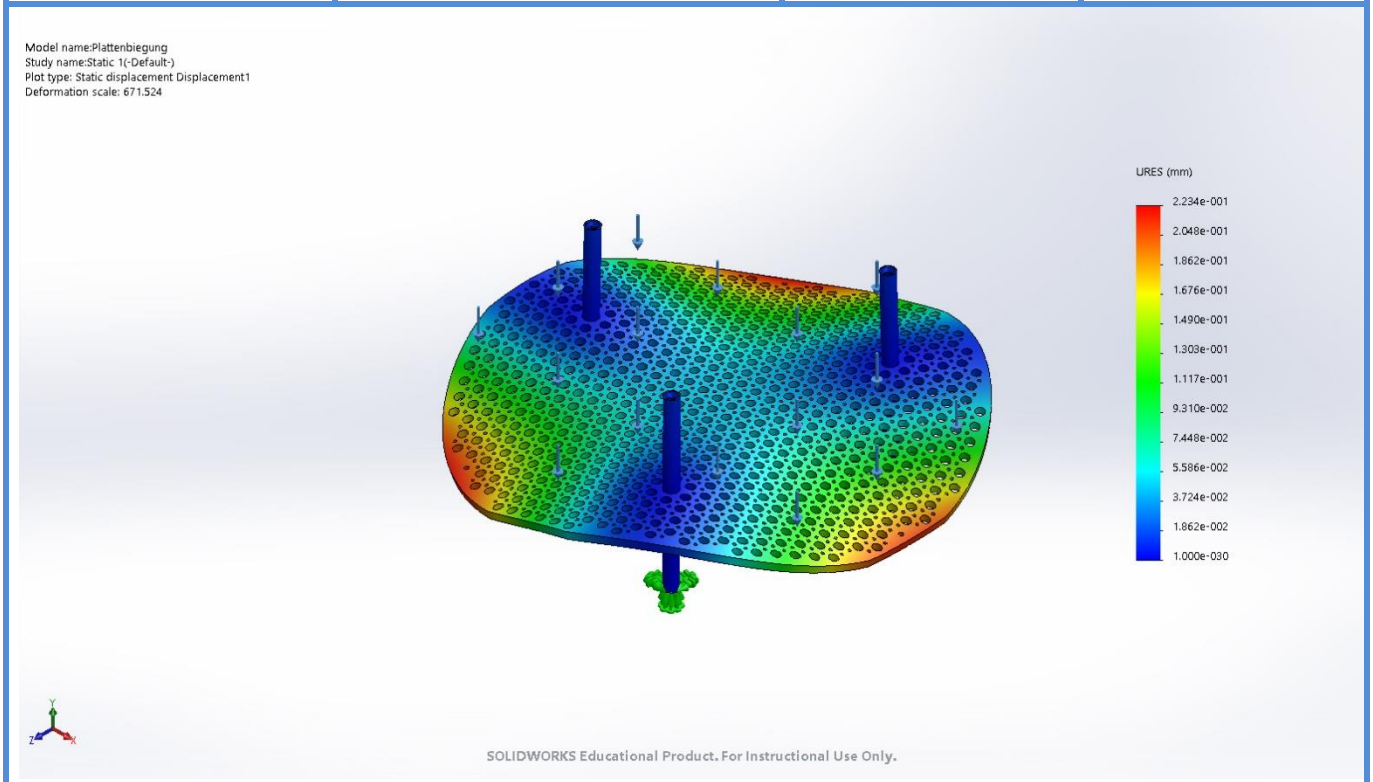

Plattenbiegung-Static 1-Displacement-Displacement1

Name	Type	Min	Max
Strain1	ESTRN: Equivalent Strain	1.156e-013 Element: 256954	4.339e-005 Element: 123373

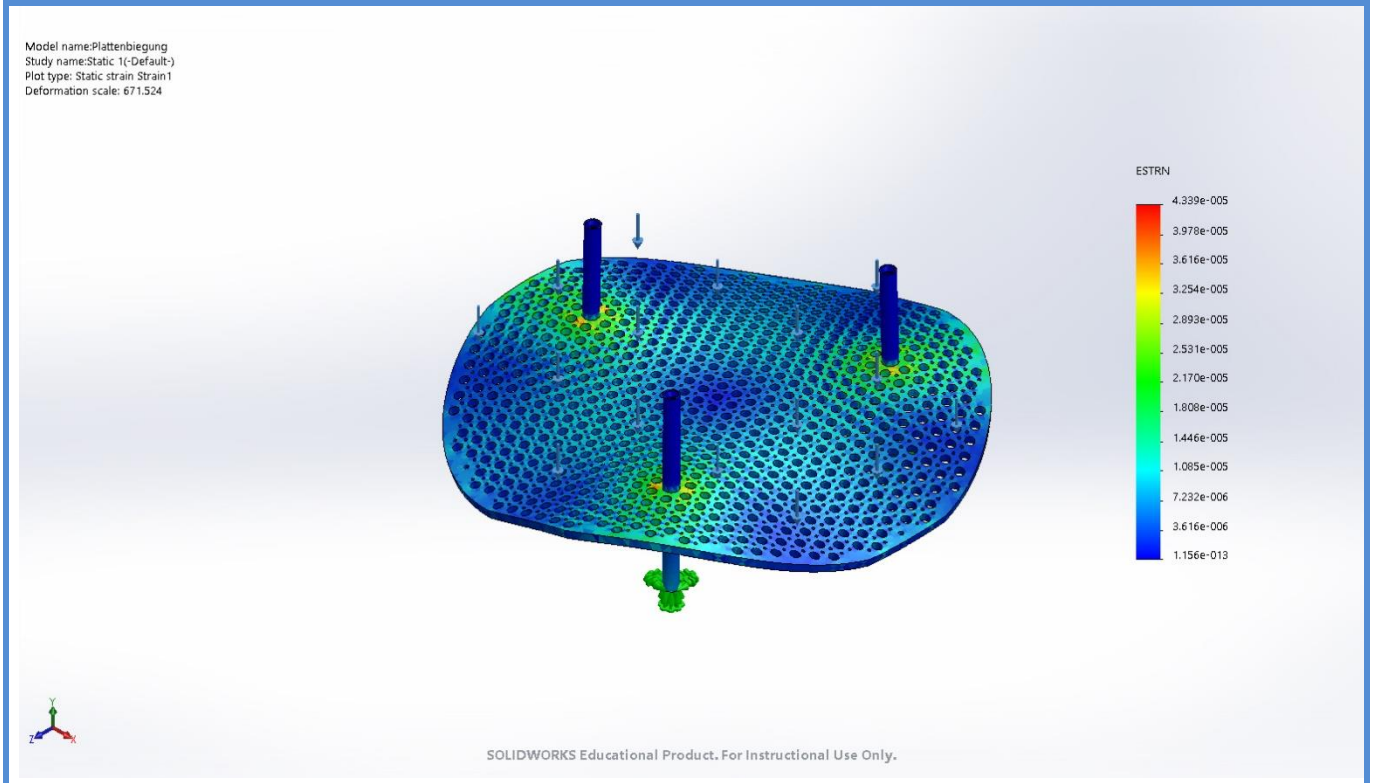

Plattenbiegung-Static 1-Strain-Strain1

Conclusion

Es ist klar ersichtlich, dass die Chargierplatte überdimensioniert ist, da die maximale Mieses-Vergleichsspannung 14.63 N/mm² beträgt. Durch diese Überdimensionierung ist eine hohe Beständigkeit gegen die zahlreichen Wärmezyklen der Chargierplatte gewährleistet.

Auch ist somit ein großer Sicherheitsfaktor gegen das Aushärten der Platte durch den Härteprozess garantiert.

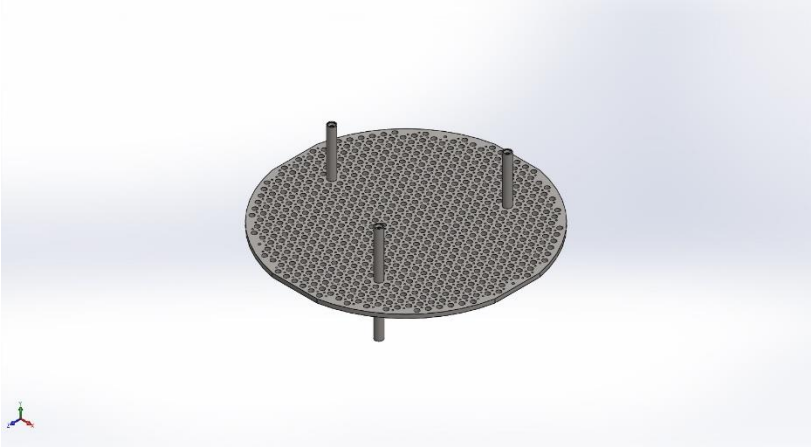

Simulation of Plattenbiegung_600

Date: 06 October 2018
Designer: Gnadlinger
Study name: Static maxT
Analysis type: Static

Table of Contents

Description 1
Assumptions 2
Model Information 3
Study Properties 5
Units 5
Material Properties 6
Loads and Fixtures 7
Contact Information 8
Mesh information 9
Sensor Details 10
Resultant Forces 10
Beams .....**Fehler! Textmarke nicht definiert.**
Study Results 11
Conclusion 13

Description

FEM-Analyse der Chargierplatte bei 600°C Betriebstemperatur.

Assumptions

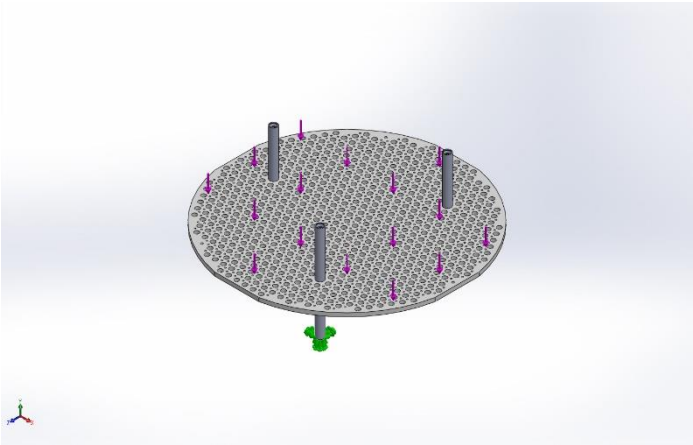

Original Model

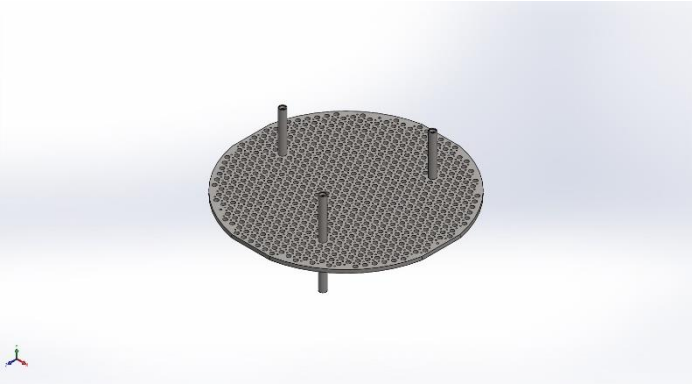

Model Analyzed

Model Information

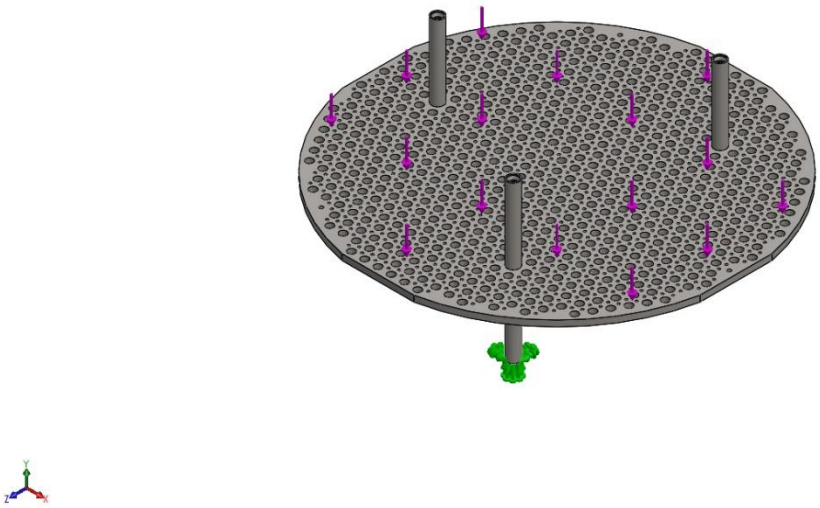

Model name: Plattenbiegung
Current Configuration: Default

Solid Bodies

Document Name and Reference	Treated As	Volumetric Properties	Document Path/Date Modified
Cut-Extrude2 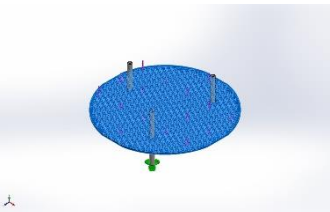	Solid Body	**Mass:248.447 kg** **Volume:0.0318522 m^3** **Density:7800 kg/m^3** **Weight:2434.78 N**	**C:\Users\micha\Dropbox\Diplomarbeit (1)\Zeichnugsableitungen_email\KPL6(55.55)_Platte(1530)_D30_Zentrum_mitO.SLDPRT** Mar 26 13:34:21 2019
M12 Gewindebohrung1 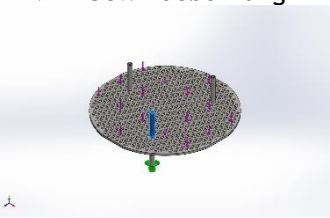	Solid Body	**Mass:4.67087 kg** **Volume:0.000598829 m^3** **Density:7800 kg/m^3** **Weight:45.7745 N**	**C:\Users\micha\Dropbox\Diplomarbeit (1)\fertigeÖfen\Steher\Oberseite_KPL_6.SLDPRT** Jan 06 14:58:46 2019
M12 Gewindebohrung1 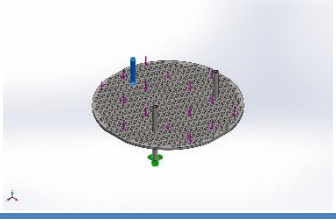	Solid Body	**Mass:4.67087 kg** **Volume:0.000598829 m^3** **Density:7800 kg/m^3** **Weight:45.7745 N**	**C:\Users\micha\Dropbox\Diplomarbeit (1)\fertigeÖfen\Steher\Oberseite_KPL_6.SLDPRT** Jan 06 14:58:46 2019

Gnadlinger

M12 Gewindebohrung1 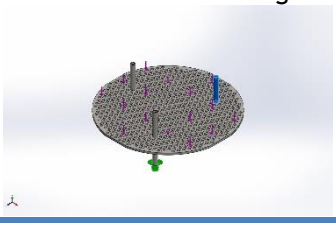	Solid Body	**Mass:4.67087 kg** **Volume:0.000598829 m^3** **Density:7800 kg/m^3** **Weight:45.7745 N**	**C:\Users\micha\Dropbox\Diplomarbeit (1)\fertigeÖfen\Steher\Oberseite_KPL_6.SLDPRT** Jan 06 14:58:46 2019
M12 Gewindebohrung1 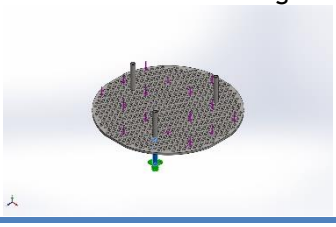	Solid Body	**Mass:4.67087 kg** **Volume:0.000598829 m^3** **Density:7800 kg/m^3** **Weight:45.7745 N**	**C:\Users\micha\Dropbox\Diplomarbeit (1)\fertigeÖfen\Steher\Oberseite_KPL_6.SLDPRT** Jan 06 14:58:46 2019
M12 Gewindebohrung1 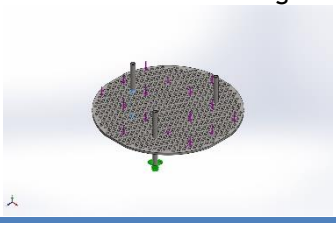	Solid Body	**Mass:4.67087 kg** **Volume:0.000598829 m^3** **Density:7800 kg/m^3** **Weight:45.7745 N**	**C:\Users\micha\Dropbox\Diplomarbeit (1)\fertigeÖfen\Steher\Oberseite_KPL_6.SLDPRT** Jan 06 14:58:46 2019
M12 Gewindebohrung1 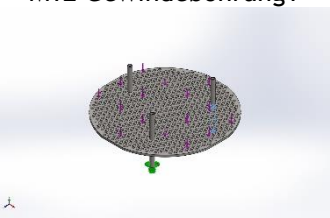	Solid Body	**Mass:4.67087 kg** **Volume:0.000598829 m^3** **Density:7800 kg/m^3** **Weight:45.7745 N**	**C:\Users\micha\Dropbox\Diplomarbeit (1)\fertigeÖfen\Steher\Oberseite_KPL_6.SLDPRT** Jan 06 14:58:46 2019

Study Properties

Study name	Static maxT
Analysis type	Static
Mesh type	Solid Mesh
Thermal Effect:	On
Thermal option	Include temperature loads
Zero strain temperature	298 Kelvin
Include fluid pressure effects from SOLIDWORKS Flow Simulation	Off
Solver type	FFEPlus
Inplane Effect:	Off
Soft Spring:	Off
Inertial Relief:	Off
Incompatible bonding options	Automatic
Large displacement	Off
Compute free body forces	On
Friction	Off
Use Adaptive Method:	Off
Result folder	SOLIDWORKS document (C:\Users\micha\Desktop\FE-Simulationen\Plattenbiegung_KPL6)

Units

Unit system:	SI (MKS)
Length/Displacement	mm
Temperature	Kelvin
Angular velocity	Rad/sec
Pressure/Stress	N/m^2

Material Properties

Model Reference	Properties	Components
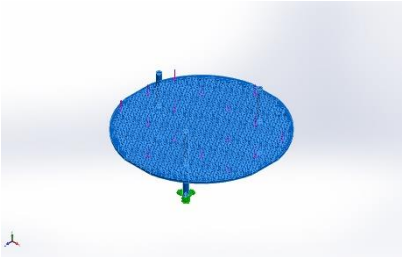	**Name:** 1.4828_600 **Model type:** Linear Elastic Isotropic **Default failure criterion:** Max von Mises Stress **Yield strength:** 1.6e+008 N/m^2 **Tensile strength:** 1.6e+008 N/m^2 **Elastic modulus:** 1.5e+011 N/m^2 **Poisson's ratio:** 0.34 **Mass density:** 7800 kg/m^3 **Shear modulus:** 55970 N/m^2 **Thermal expansion coefficient:** 1.1e-005 /Kelvin	SolidBody 1(Cut-Extrude2)(KPL6(55.55)_Platte(1530)_D30_Zentrum_mitO-1), SolidBody 1(M12 Gewindebohrung1)(Oberseite_KPL_6-1), SolidBody 1(M12 Gewindebohrung1)(Oberseite_KPL_6-2), SolidBody 1(M12 Gewindebohrung1)(Oberseite_KPL_6-3), SolidBody 1(M12 Gewindebohrung1)(Oberseite_KPL_6-4), SolidBody 1(M12 Gewindebohrung1)(Oberseite_KPL_6-5), SolidBody 1(M12 Gewindebohrung1)(Oberseite_KPL_6-6)
Curve Data:N/A		

Loads and Fixtures

Fixture name	Fixture Image	Fixture Details
Fixed-1	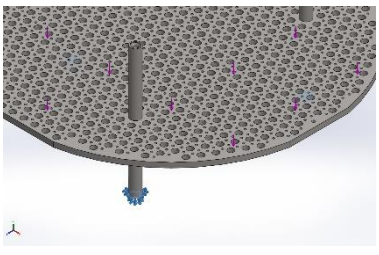	**Entities:** 3 face(s) **Type:** Fixed Geometry

Resultant Forces

Components	X	Y	Z	Resultant
Reaction force(N)	-0.00282383	6500	-0.0161655	6500
Reaction Moment(N.m)	0	0	0	0

Load name	Load Image	Load Details
Force-1	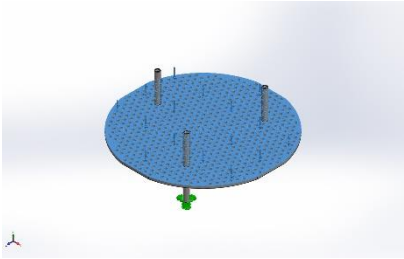	**Entities:** 3 face(s) **Type:** Apply normal force **Value:** 6500 N

Contact Information

Contact	Contact Image	Contact Properties
Global Contact	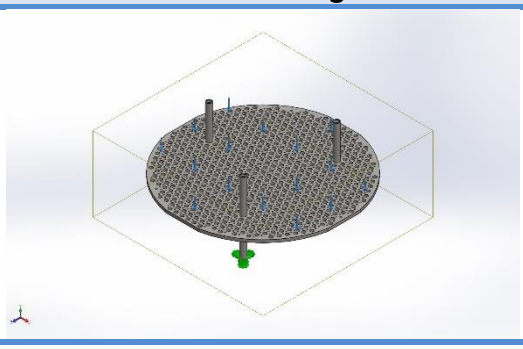	**Type:** Bonded **Components:** 1 component(s) **Options:** Compatible mesh

Mesh information

Mesh type	Solid Mesh
Mesher Used:	Curvature-based mesh
Jacobian points	4 Points
Maximum element size	69.1485 mm
Minimum element size	13.8297 mm
Mesh Quality Plot	High
Remesh failed parts with incompatible mesh	Off

Mesh information - Details

Total Nodes	463545
Total Elements	260869
Maximum Aspect Ratio	13.246
% of elements with Aspect Ratio < 3	77.3
% of elements with Aspect Ratio > 10	0.00115
% of distorted elements(Jacobian)	0
Time to complete mesh(hh;mm;ss):	00:00:44
Computer name:	

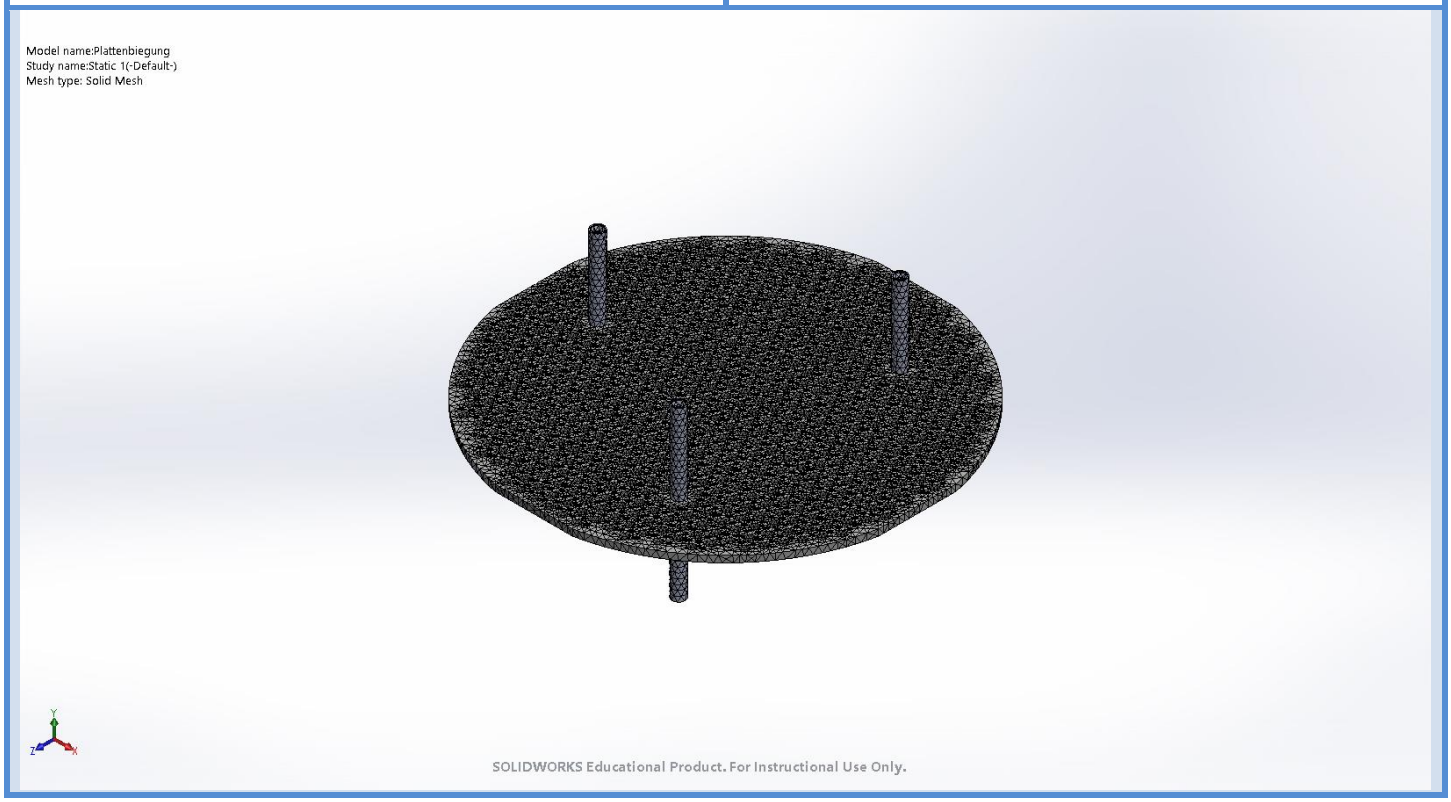

Sensor Details

Sensor name	Location	Sensor Details
Masse1	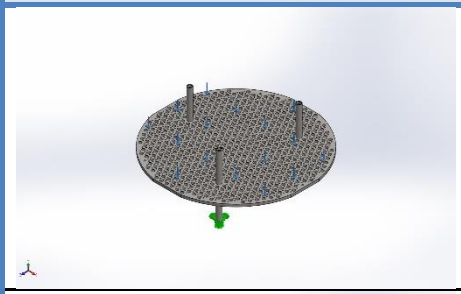	Value : 598.829211 g Entities : Result :Stress Component :VON: von Mises Stress Criterion :Model Max Step Criterion : Across all Steps Step No.:1 Alert Value: NA
Spannung1	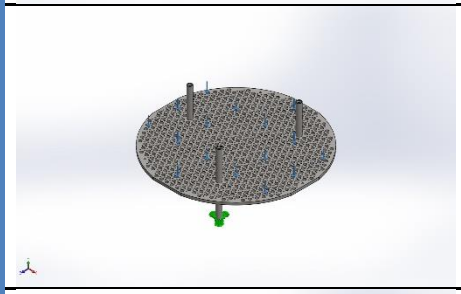	Value : Entities : Result :Stress Component :VON: von Mises Stress Criterion :Model Max Step Criterion : Across all Steps Step No.:1 Alert Value: NA
Verschiebung1	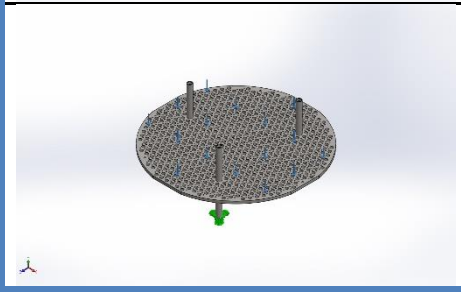	Value : Entities : Result :Displacement Component :URES: Resultant Displacement Criterion :Model Max Step Criterion : Across all Steps Step No.:1 Alert Value: NA

Resultant Forces

Reaction forces

Selection set	Units	Sum X	Sum Y	Sum Z	Resultant
Entire Model	N	-0.00282383	6500	-0.0161655	6500

Reaction Moments

Selection set	Units	Sum X	Sum Y	Sum Z	Resultant
Entire Model	N.m	0	0	0	0

Study Results

Name	Type	Min	Max
Stress1	VON: von Mises Stress	3.756e-008N/mm^2 (MPa) Node: 458020	1.463e+001N/mm^2 (MPa) Node: 73324

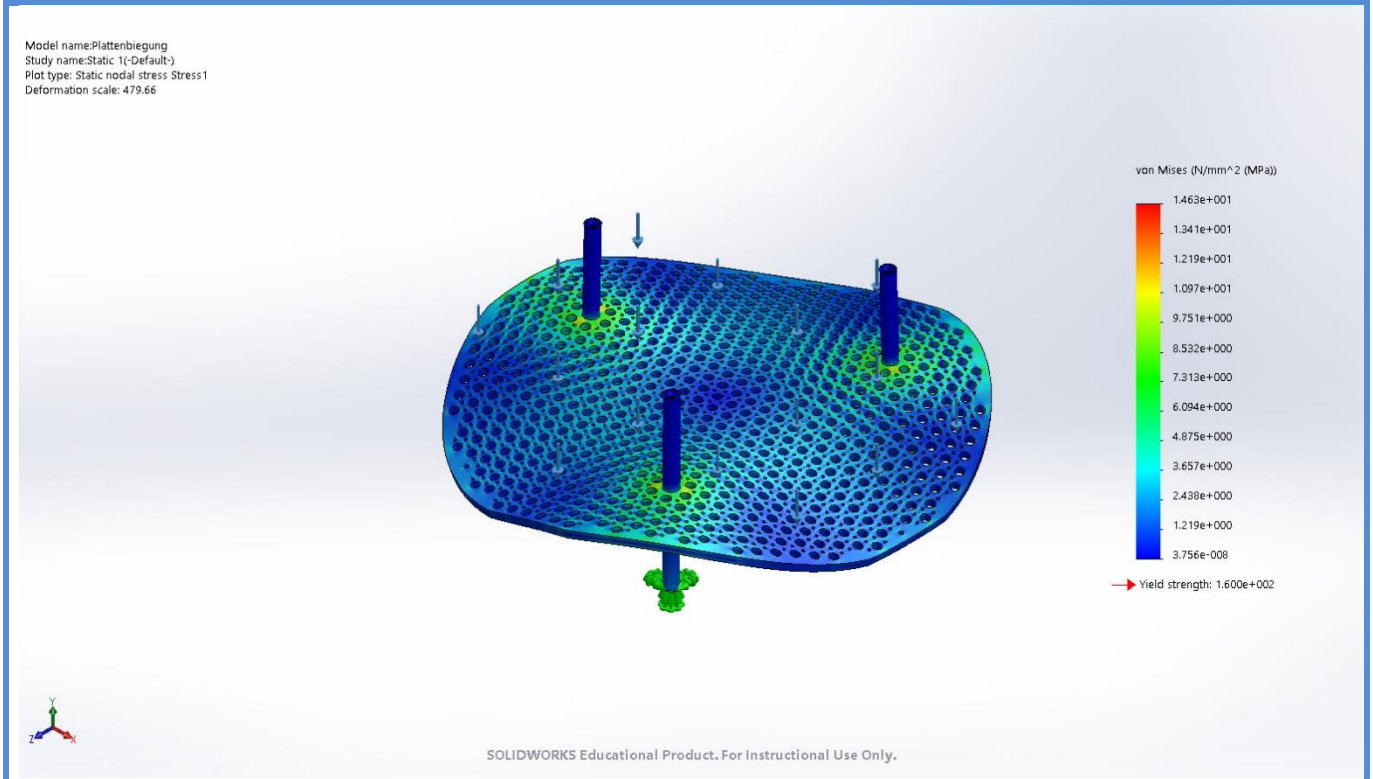

Plattenbiegung-Static 1-Stress-Stress1

Name	Type	Min	Max
Displacement1	URES: Resultant Displacement	0.000e+000mm Node: 458326	3.128e-001mm Node: 71054

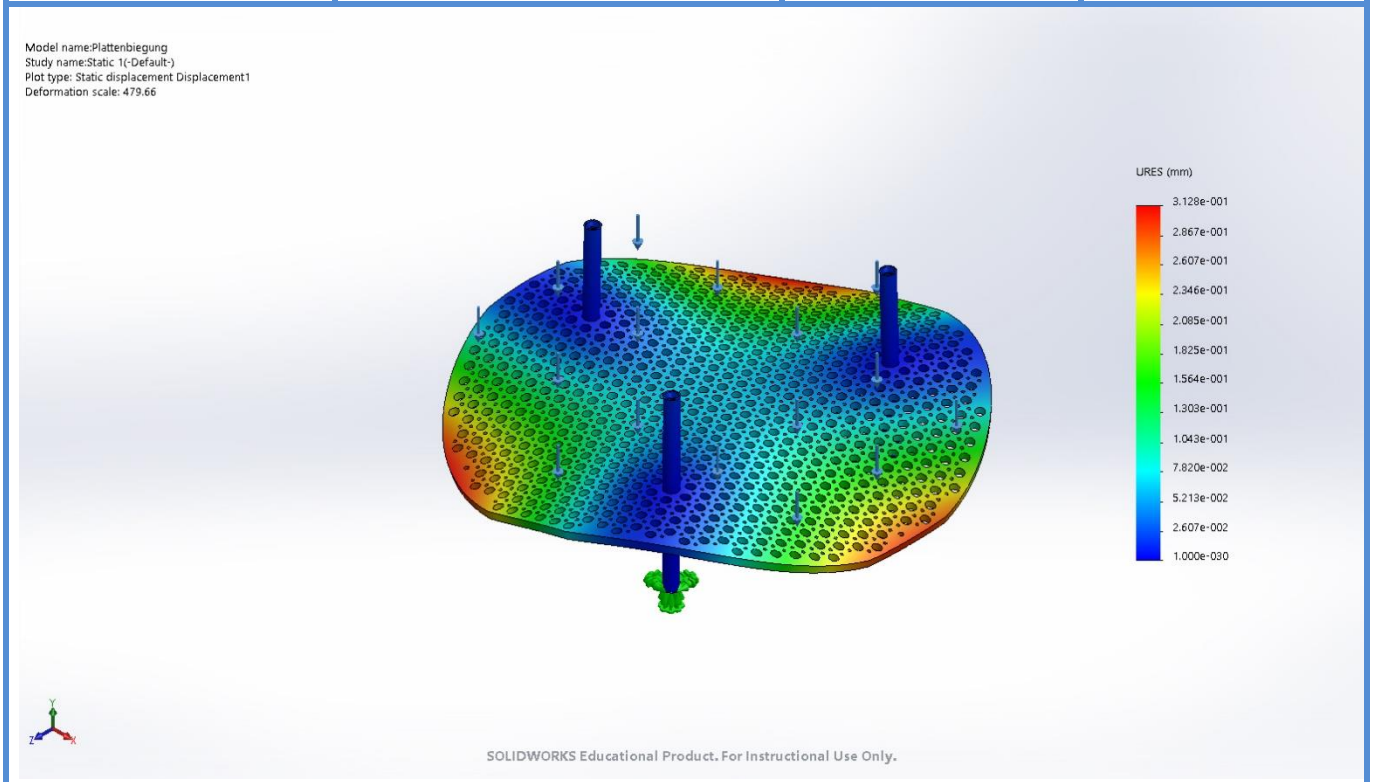

Plattenbiegung-Static 1-Displacement-Displacement1

Name	Type	Min	Max
Strain1	ESTRN: Equivalent Strain	1.625e-013 Element: 256954	6.075e-005 Element: 123373

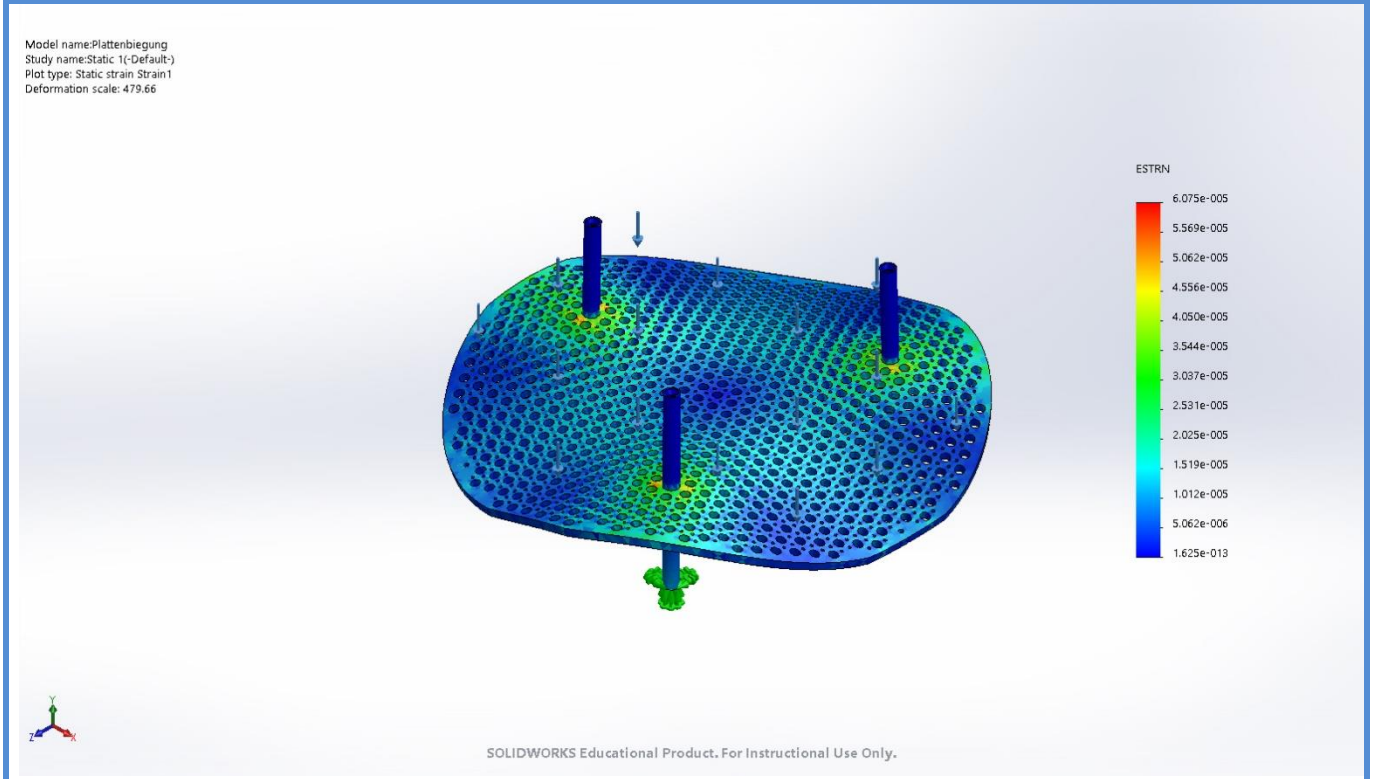

Plattenbiegung-Static 1-Strain-Strain1

Conclusion

Bei erhöhter Temperatur ist klar zu sehen, dass sich, wie erwartet, eine höhere Durchbiegung der Platte ergibt. Diese Durchbiegung ist mit maximal 0.313mm in Ordnung.